FAVORIT 50760 i

Dishwasher

User Instructions

Dear customer,

Please read these user instructions carefully.

Please observe the safety instructions on the first few pages of these user instructions! Please keep these user instructions for later reference. Pass them on to any subsequent owner of the appliance.

The warning triangle and/or specific words (**Warning!**, **Caution!**, **Important!**) are used to highlight instructions that are important for your safety or for the function of the appliance. It is imperative that these instructions are observed.

☞ This symbol or numbered instruction steps lead you step by step through the operation of the appliance.

Next to this symbol you receive additional information and practical tips on using the appliance.

Tips and instructions for the economical and environmentally conscious use of the appliance are marked with a clover leaf.

In the event of a malfunction, these operating instructions contain information on how to rectify faults yourself, see the "What to do, if..." section.

If these instructions are insufficient, please contact your AEG Service Force Centre.

In this respect please read the chapter "Service & Spare Parts".

Printed on paper manufactured with environmentally sound processes.
He who thinks ecologically acts accordingly ...

CONTENTS

Operating Instructions 5

Safety Instructions 5

Disposal 7

Economical and Ecological Dishwashing 7

Appliance Features and Control Panel 8
Control panel 9

Prior to using for the first time 9
Adjust the Water Softener 10
Filling with Salt for the Water Softener 11
Filling with Rinse Aid 12
Adjusting Rinse Aid Dosing 13

In Daily Use 13
Loading Cutlery and Dishes 14
Loading Cutlery 15
Loading Pans, Frying Pans and Large Plates 16
Loading Cups, Glasses and Coffee Services 17
Adjusting the Height of the Upper Basket 18
Filling with Detergent 19
Bio Wash Programmes and Concentrated Detergents 20
Selecting the Wash Programme (Programme Table) 21
Start the Wash Programme 22
Changing/Interrupting/Cancelling the Wash Programme 22
Setting or Changing the Delay Start Timer 23
Load Sensing – Sensor Logic 24
Switching Off the Dishwasher 24
Emptying the Dishwasher 24

Care and Cleaning 24
Cleaning the Filter 25

What to do, if 26
...Error messages 26
...there are problems with the operation of the dishwasher. 27
...the wash results are not satisfactory. 27

Technical Data 28

Notes for Test Institutes 29

Installation and Connection Instructions 30

Installing the Dishwasher 30
    Dishwashers That Can Be Integrated 31

Connecting the Dishwasher 32
Water Connection 32
    Permitted water pressure 32
    Connect the inlet hose 32
    Water drain 33
    Leak Prevention System 34
Electrical Connection 35
Connections 36

Guarantee Conditions 37

Service & Spare parts 39

OPERATING INSTRUCTIONS

⚠ Safety Instructions

The safety aspects of AEG electrical appliances comply with accepted technical standards and the German Appliance Safety Law. Nevertheless, as a manufacturer we consider it our obligation to make you aware of the following safety information:

Installation, Connection and Placing into Operation

- The dishwasher may only be transported upright.
- Check the dishwasher for transport damage. Do not in any circumstances connect an appliance that is damaged. In the case of damage, please contact your retailer.
- Before installing the appliance, ensure that the nominal voltage and type of supply on the rating plate match that of the supply where the appliance is to be installed. The fuse rating is also to be found on the rating plate.
- For information on how to correctly install and connect up your dishwasher, please read the “Installation“ section. Adaptors / connectors and extension cables must not be used.

Child Safety

- This appliance is designed to be operated by adults. Children should not be allowed to tamper with the controls or play with the product.
- Keep all packaging away from children.
- Keep all detergents in a safe place out of children’s reach.
- The water in your dishwasher is not suitable for drinking. If there are still remnants of detergent in the appliance, there is a risk of burns!
- When disposing of an old appliance, cut off the power supply cable and remove any door catches, to prevent young children being trapped inside.

General Safety

- Repairs to the dishwasher are only to be carried out by qualified service engineers. Improper repairs can give rise to significant hazards for the user. If your appliance needs repairing, please contact your local AEG Service Force Centre.

- Never place the dishwasher in operation if the mains cable, water inlet or drain hose is damaged; or the control panel, work top or plinth area is damaged such that the inside of the appliance is freely accessible.
- If the mains lead is damaged, or is to be replaced for a longer lead, the cable (obtainable from AEG Service Force) must be replaced by a service engineer authorised by AEG.
- Never unplug the appliance by pulling on the cable, always pull the plug.
- Additions or modifications to the dishwasher are not permitted for safety reasons.
- Ensure that the door of the dishwasher is always closed when it is not being loaded or unloaded. In this way you will avoid anybody tripping over the open door and hurting themselves.
- Long bladed knives stored in an upright position are a potential hazard.
- Long and/or sharp items of cutlery such as carving knives must be positioned horizontally in the upper basket.
- When finished loading or unloading, close the door as an open door can be a hazard.

Correct Use

- Only wash household dishes using the dishwasher. If the appliance is used for other purposes, or is used incorrectly, the manufacturer cannot accept any liability for any damage caused.
- Only use detergents specifically designed for use in domestic dishwashers.
- Do not put any solvents in the dishwasher. There is a risk of an explosion!
- The anti-flood system provides dependable protection against damage due to leaks. For this system to function correctly, the following preconditions must be met:
  - The appliance must remain connected to the mains even when it is switched off.
  - The dishwasher must be correctly installed.
  - Always shut off the water supply at the tap when the dishwasher is not to be used for longer periods, e.g. when you are away on holiday.
- Do not sit or stand on the open door, the appliance may tip over.

- In the event of a fault, first close the tap, then switch off the appliance and unplug it from the mains. If the appliance is permanently wired to the mains: remove the fuse.

Disposal

Disposing of the Packaging Material

Dispose of the dishwasher packaging material correctly. All the packaging materials used are harmless to the environment and can be recycled.

- Plastic parts are marked with standard international abbreviations:
  - >PE< for polyethylene, e.g. sheet wrapping material
  - >PS< for polystyrene, e.g. padding material (always CFC-free)
  - >POM< for polyoxymethylene, e.g. plastic clips
- Cardboard packaging is manufactured from recycled paper and should be deposited in the waste paper collection for recycling.

Disposal of Old Appliances

When disposing of old appliances, remove the plug and ensure that any locks or catches are removed to prevent young children becoming trapped inside.

Use an authorised disposal site.

Economical and Ecological Dishwashing

- Ensure that the water softener is correctly adjusted.
- Do not pre-rinse dishes under running water.
- When you wash a small load, the load sensor calculates the amount of water necessary and shortens the programme. It is more economical to always wash with a full load.
- Select the wash programme to suit the nature and degree of the soiling on the dishes.
- Do not use more detergent, special salt or rinse aid than is recommended in these operating instructions and by the detergent manufacturer.

Appliance Features and Control Panel

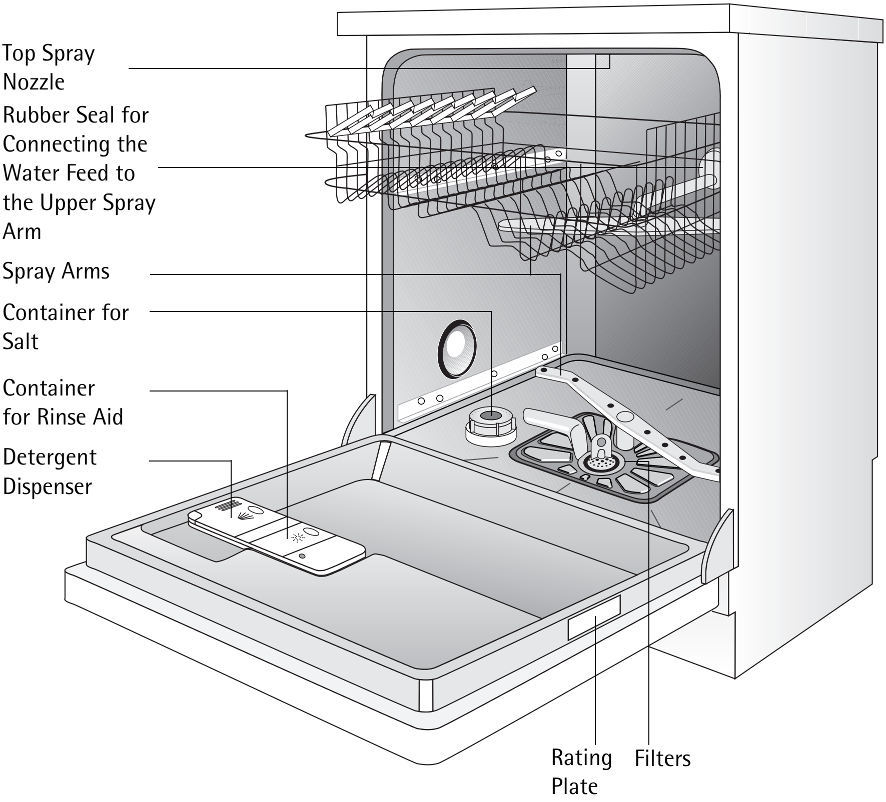

Control panel

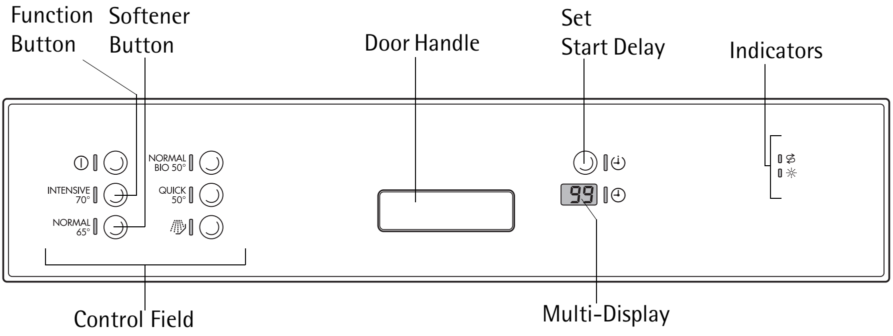

The **Control Field** comprises the ON/OFF switch ⏀ and the programme buttons with LED indicators.

Softener and Function Button: in addition to the wash programme marked, it is also possible to adjust the dishwasher's water softener using the combination of these buttons.

The **Multi-Display** can display,
– the hardness setting to which the water softener is set.
– the start delay that is set.
– how long the current wash programme can be expected to last.
– which fault has occurred on the dishwasher.

The **Indicators** have the following meanings:

(salt symbol)	Refill with special salt
(rinse aid symbol)	Refill with rinse aid

Prior to using for the first time

Prior to using for the first time, remove all the clips with which the dish racks are secured for transport.
Then perform the following steps:

☞ **1.** Adjust the water softener

2. Fill with Salt for the Water Softener

3. Fill with Rinse Aid

Adjust the Water Softener

To avoid the scale deposits on the dishes and in the dishwasher, the dishes must be washed with soft, i.e. low lime content, water. The dishwasher therefore has a built-in water softener, in which tap water from a hardness of 4 °d (German degree) is softened with the aid of special salt.

ℹ You water supplier will be able to inform you on the hardness and hardness range of the water in your area.

☞ Adjust the water softener to the setting given in the table that corresponds to the hardness of the water in your area. The water softener can be adjusted in 10 steps.

Water Hardness in °d[1])	Water Hardness in ppm [2])	Range	Adjust to Hardness Setting	Indication on the Multi-Display
41-50	730-900	IV	9	H 9
35-40	630-720	IV	8	H 8
31-34	550-620	IV	7	H 7
27-30	480-540	IV	6	H 6
23-26	410-470	IV	5	H 5
19-22	330-400	III	4	H 4
15-18	260-320	III	3*	H 3
11-14	190-250	II	2	H 2
4-10	70-180	I/II	1	H 1
under 4	under 70	I	0 no salt necessary	H 0

1)(°d) German degree, measure of the hardness of water
2)(ppm) Parts Per Million
*factory setting

☞ **1.** The dishwasher must be switched off.

2. Press the function and water softener buttons simultaneously and keep them pressed

3. In addition press the ON/OFF switch.
The LED indicators for the function and water softener buttons flash.

4. Press the softener button again.
The multi-display indicates the hardness setting.

5. Pressing the water softener button increases the hardness setting by 1. (Exception: hardness setting 0 follows hardness setting 9).

6. When the hardness setting is correct, press the ON/OFF switch.
The hardness setting is then saved.

Filling with Salt for the Water Softener

⚠ Use only salt designed for dishwashers. Never fill the salt container with any another type of salt (e.g. culinary salt) or dishwasher detergent as this would irreparably damage the water softener.
Prior to filling with salt, please check each time that you really do have a packet of dishwasher salt in your hand.

Fill with dishwasher salt:

– Prior to using the dishwasher for the first time
– When the SALT indicator on the control panel is illuminated.

ℹ If the water hardness in your area is less than 4 °d, you do not need to use dishwasher salt. The SALT indicator on the control panel will remain illuminated.

☞ **1.** Open the door, remove the lower rack.

2. Undo the lid on the salt container by turning it anticlockwise.

3. When using for the first time: fill the salt container with water.

4. Place the funnel supplied on the container opening.
Fill the container with salt through the funnel; the capacity of the container is approx. 1.0-1.5 kg depending on the grain size. Do not overfill the salt container with salt.

ℹ The water expelled by filling the salt container with salt runs out of the salt container onto the base of the washing compartment. This is not a cause for concern, the water will be pumped out at the start of the next wash programme.

5. Clean any salt remnants on the container opening.

6. Turn the lid clockwise to the stop, otherwise dishwasher salt will leak into the wash water, this could lead to poor wash results. To avoid this run a rinse programme after filling the salt container with special salt. This will wash away salt water and any salt crystals that have been spilt.

Depending on the size of the salt grains, it can take several hours for the salt to dissolve in the water and the special salt indicator ⇆ to extinguish. The setting of the water softener and the consumption of salt are dependent on the hardness of the local water.

Filling with Rinse Aid

Rinse aid is automatically added during the last rinse, ensuring thorough rinsing, spot and streak free drying.

Only use rinse aid specifically designed for domestic dishwashers. Never fill the rinse aid container with any other substance as this would damage the appliance.

Fill with rinse aid:
- Prior to using the dishwasher for the first time
- When the RINSE AID indicator ☼ on the control panel is illuminated.

The rinse aid compartment is on the inside of the dishwasher door.

1. Open the door.
2. Press the rinse aid compartment release button with your finger.
3. Fully open the rinse aid compartment lid.

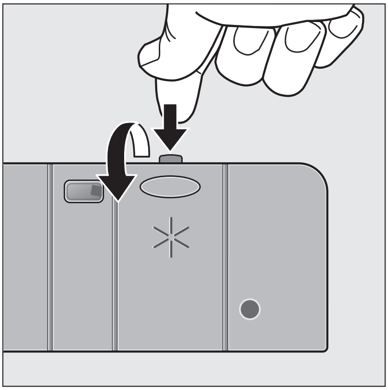

4. Fill with rinse aid exactly up to the level marked “max”; this corresponds to a quantity of approx. 140 ml.
5. Close the lid and press until it locks into place.
6. Wipe up any spilt rinse aid with a cloth. Otherwise too much foam will be formed during the wash.

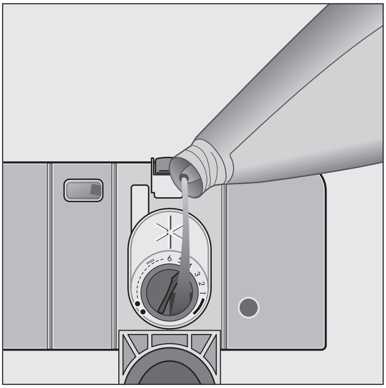

Adjusting Rinse Aid Dosing

As the dishes are washed rinse aid is released from the dispenser into the wash water. The dose is factory set at 4, and can be adjusted from 1 to 6. Only change the setting if streaks, milky spots or dried on water marks are visible on glasses or crockery.

☞ 1. Open the door of the dishwasher.
2. Press the rinse aid compartment release button with your finger.
3. Fully open the rinse aid compartment lid.
4. Set the dose level.
5. Close the lid and press until it locks into place.
6. If rinse aid has run out, wipe up with a cloth.

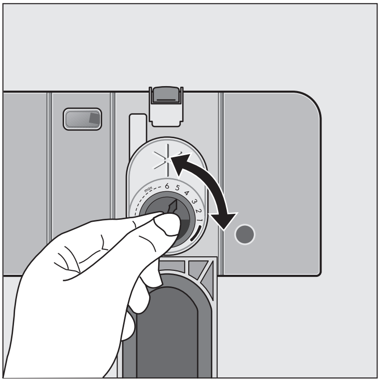

In Daily Use

- Check the salt and rinse aid levels.
- Load cutlery and dishes into the dishwasher
- Fill with dishwasher detergent
- Select a wash programme suitable for the cutlery and dishes
- Start the wash programme

Loading Cutlery and Dishes

⚠ Sponges, household cloths and any object that can absorb water should not be washed in the dishwasher.

For washing in the dishwasher the following cutlery/dishes	
are not suitable:	**are of limited suitability:**
• Cutlery with wooden, horn, china or mother of pearl handles • Plastic items that are not heat resistant • Older cutlery with glued parts that is not temperature resistant • Bonded cutlery items or dishes • Pewter or copper items • Lead crystal glass • Steel items subject to rusting • Wooden platters • Items made from synthetic fibres	• Only wash stoneware in the dishwasher if it is specifically marked as being dishwasher-safe by the manufacturer. • Glazed patterns may fade if machine washed frequently. • Silver and aluminium parts have a tendency to discolour during washing. Left-overs, e.g. egg white, egg yolk and mustard often cause discolouring and staining on silver. Therefore always clean left-overs from silver immediately, if it is not to be washed straight after use. • Some types of glass can become dull after a large number of washes.

- Before loading the dishes, you should:
  - Remove all scraps of food.
  - Soften remnants of burnt food in pans.
- When loading the dishes and cutlery, please note:
  - Dishes and cutlery must not impede the rotation of the spray arms.
  - Load hollow items such as cups, glasses, pans, etc. with the opening downwards so that water cannot collect in the container or a deep base.
  - Dishes and items of cutlery must not lie inside one another, or cover each other
  - To avoid damage to glasses, they must not touch
  - Do not lay small objects (e.g. lids) in the cutlery rack

Loading Cutlery

⚠ Long bladed knives stored in an upright position are a potential hazard.

⚠ Long and/or sharp items of cutlery such as carving knives must be positioned horizontally in the upper basket.

⚠ Take care when loading or unloading sharp items such as knives.

To ensure that all items of cutlery are completely washed, you should

☞ 1. Place the grid insert on the cutlery rack
2. Place short knives, forks and spoons in the grid insert with their handles pointing downwards.
3. For larger items of cutlery, e.g. a whisk, half of the top for the cutlery basket can be left off.

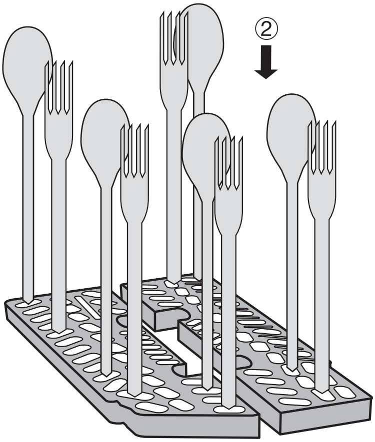

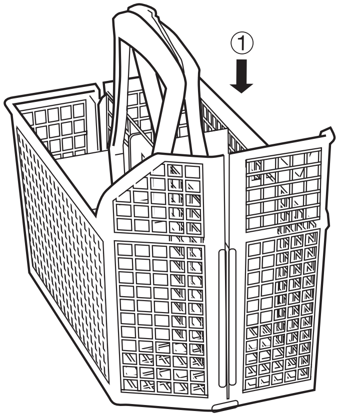

On some models of dishwasher it is possible to open the cutlery basket.

⚠ To ensure that the cutlery rack cannot open on removal from the appliance, you should always hold both parts of the two part handle.

☞ 1. Place the cutlery rack on a table or work surface
2. Open the two part handle
3. Remove cutlery
4. Close the two part handle.

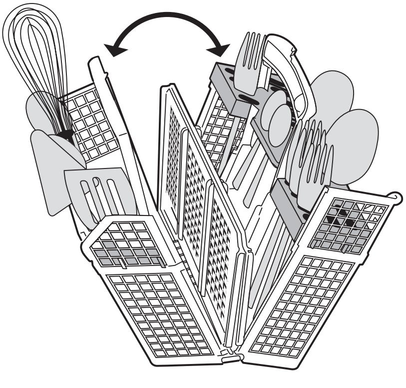

Loading Pans, Frying Pans and Large Plates

Load large and heavily soiled dishes in the lower rack.

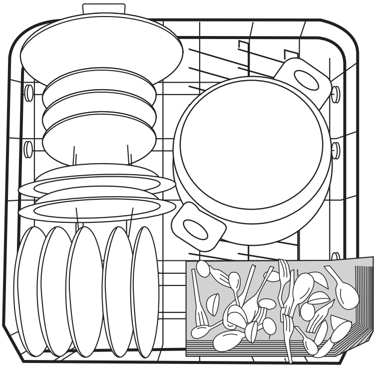

To ease the loading of large items **at some dishwasher-models** the two rows of prongs for the right-hand plate insert can be folded down:

☞ **1.** Slightly lift the right plate insert.

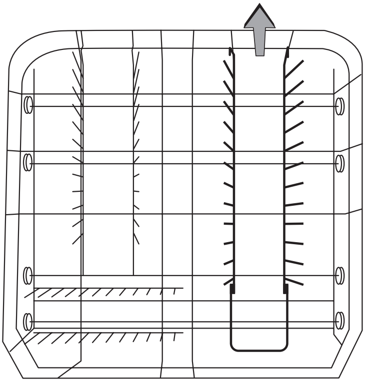

2. Fold the plate insert to the left.

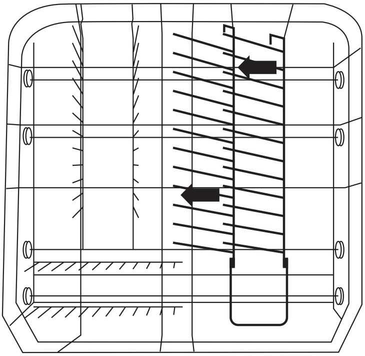

Loading Cups, Glasses and Coffee Services

Load small, delicate items and long pointed cutlery in the upper rack.

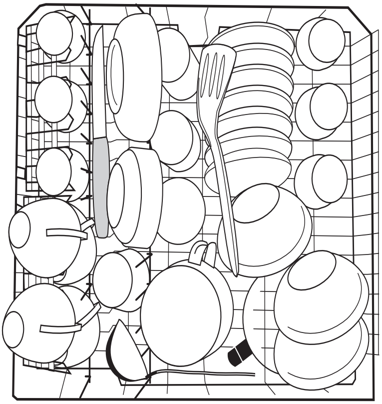

- Arrange items of crockery on the folding cups racks so that they are offset from each other and water can reach all items.
- The cup racks can be folded up out of the way for tall items.
- Lay or hang wine, champagne, and brandy glasses in the cut outs on the cup racks.
- Glasses, beakers, etc. can also be placed on the two rows of prongs on the left of the upper rack.

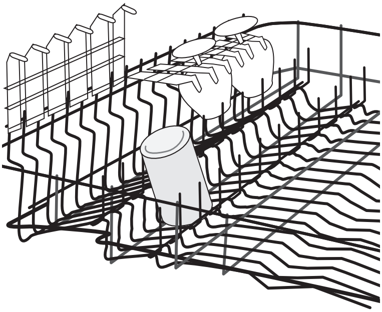

Adjusting the Height of the Upper Basket

	Maximum Height of the Dishes in the Upper Basket	Lower Basket
With upper basket raised	22 cm	31 cm
With upper basket lowered	24 cm	29 cm

The height of the basket can also be adjusted when it is loaded.

Depending on the model, your appliance is provided with one of the following types of upper basket:

Type 1

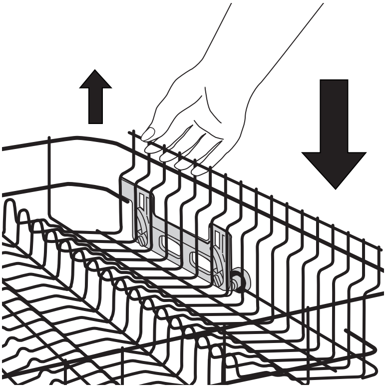

Lowering the Upper Basket:

1. Pull the upper basket out completely.
2. Lift the upper basket at the rear right and lower.

Raising the Upper Basket:

1. Pull the upper basket out completely.
2. Raise the upper basket at the rear right, pull slightly forward and allow to lock into place in the upper position.

Type 2

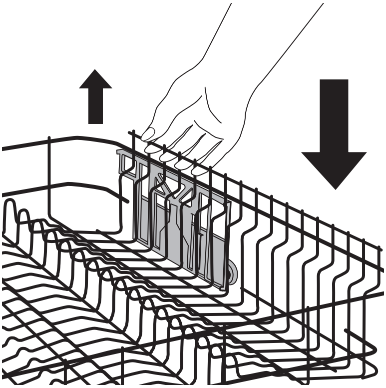

Lowering the Upper Basket:

1. Pull the upper basket out completely.
2. Holding the upper basket at the rear right, lift it as far as it will go and then lower it vertically. The upper basket will engage in the lower position.

Raising the Upper Basket:

1. Pull the upper basket out completely.
2. Holding the upper basket at the rear right, lift it as far as it will go and then lower it vertically. The upper basket will engage in the higher position.

Filling with Detergent

Only use dishwasher detergent.

Fill with detergent:

– Prior to the start of a wash programme (not for the pre wash programme). The detergent is released into the wash water during the programme.

Please observe the manufacturer's dosing and storage recommendations as stated on the detergent packaging.

The detergent compartment is on the inside of the dishwasher door.

1. If the lid is closed:
press release button (1).
The lid springs open.

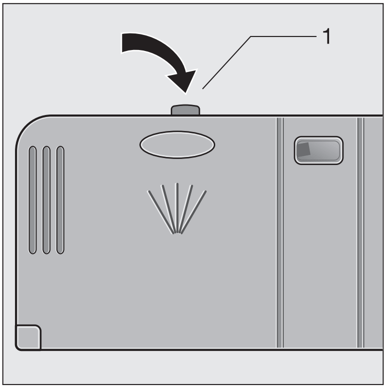

2. Fill the detergent dispenser with detergent. The markings indicate the dosing levels:
"20" corresponds to approx. 20 ml of detergent,
"30" corresponds to approx. 30 ml of detergent.

3. Close the lid and press until it locks into place.

If the dishes are very heavily soiled put additional detergent into the adjacent chamber (2). This detergent will take effect during the pre wash.

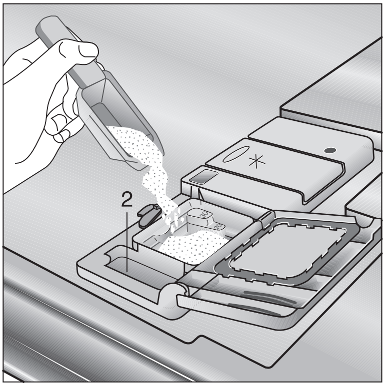

Bio Wash Programmes and Concentrated Detergents

Based on their chemical composition, dishwasher detergents can be split into two basic types:
– Conventional, alkaline detergents with caustic components
– Weak alkaline concentrated detergents with natural enzymes.

The use of BIO wash programmes in conjunction with concentrated detergents reduces pollution and is good for your dishes; the BIO wash programmes are specially matched to the soil dissolving properties of the enzymes in the concentrated detergent. It is for this reason that BIO wash programmes can achieve the same results at 50 °C that can otherwise only be achieved using 65 °C programmes.
During BIO programmes the water is briefly heated to more than 50 °C so that the active oxygen becomes effective.

Detergent tablets from different manufacturers dissolve at different rates. For this reason some detergent tablets cannot develop their full cleaning power during short programmes. Therefore please use normal programmes with pre wash when using detergent tablets.

Detergent Recommendations

For best results we recommend the use of Finish detergent, rinse aid and salt.

Selecting the Wash Programme (Programme Table)

Choose the most suitable wash programme with the aid of this table:

Type of Dishes	Dinner Service and Cooking Utensils			Dessert Dishes and Coffee Service	All Dish Types
In Addition	-	-	with non-temperature resistant dishes	with delicate glasses	-
Type of Soiling	• heavily soiled • dried on left-overs, particularly egg white and thickeners	• normally soiled • dried left-overs	• normally soiled particularly suited to the use of concentrated detergents.	• lightly soiled particularly suited to the use of concentrated detergents.	Used dishes that are being collected in the dishwasher for washing later.
Suitable Programme:	⇩ **INTENSIVE 70°**	⇩ **NORMAL 65°**	⇩ **NORMAL BIO 50°** [1) 4)]	⇩ **QUICK 50°**	⇩
Programme Sequence [2)]	Pre Wash Main Wash 2x Intermediate Rinses Final Rinse Drying	Pre Wash Main Wash Intermediate Rinse Final Rinse Drying	Pre Wash Main Wash Intermediate Rinse Final Rinse Drying	- Main Wash Intermediate Rinse Final Rinse -	Pre Wash - - - -
Consumption Figures: [3)]	⇩	⇩	⇩	⇩	⇩
Duration	110 – 120 min.	89 – 99 min.	110 – 120 min.	30 min.	10 min.
Energy	1.9 – 2.1 kWh	1.15 – 1.35 kWh	0.85 – 1.05 kWh	0.85 kWh	< 0.1 kWh
Water	18 – 20 litres	13 – 15 litres	13 – 15 litres	12 litres	4 litres

1) During BIO programmes the water is briefly heated to more than 50 °C so that the active oxygen becomes effective.

2) The various stages in the wash programme have different sounds because the dishes are washed more intensely for short periods during certain stages of the wash programme to improve cleaning.

3) The consumption figures were recorded under standard conditions. They are intended as a guide only as variations can occur during normal usage.

4) Test programme

Start the Wash Programme

☞ **1.** Check that when the dishes and cutlery are loaded into the dishwasher the spray arms are free to rotate.

2. Open the tap fully.

3. Shut the door.

4. Press the ON/OFF button. The ON/OFF button indicator illuminates.

5. Press the programme button for the desired programme (see "Programme Table"). The programme indicator illuminates. The selected programme begins after around 6 seconds. The time remaining until the end of the programme is displayed on the multi-display, the time calculated is dependent on the load in the dish racks.
With automatic programme adjustment this residual time count can be stopped or corrected if necessary (load quantity, degree of dirtiness, etc.) using the dishwasher control.

ℹ If fault messages are displayed on the multi-display after the start of the programme, please read the "What to do, if..." section.

Changing/Interrupting/Cancelling the Wash Programme

ℹ Only change or interrupt a wash programme in progress if it is absolutely necessary to do so.

Changing the wash programme

ℹ If you want to change the wash programme within 6 seconds of making a programme selection, briefly press the button for the new wash programme.

If you want to change the wash programme at a later point in time, use the following procedure:

☞ **1.** Press the button for the new wash programme and hold it pressed. The indicators for both programmes now flash.

2. After a few seconds only the indicator for the new programme flashes. Release the programme button, the new programme is now running.

Interrupting the wash programme by opening the door of the dishwasher

Hot steam may escape from the appliance when opening the door. Open the door carefully.

1. Open the door of the dishwasher. The wash programme stops.
2. The indicator for the programme that is currently running extinguishes.
3. Close the door. The wash programme continues.

Cancelling the wash programme

1. Press the button for the current wash programme and hold it pressed. The programme indicator for the current wash programme flashes for a few seconds and then extinguishes.
2. Release the programme button, the wash programme is cancelled.

A selected programme is only interrupted by switching off the dishwasher, it is not cancelled. The wash programme is continued when the dishwasher is switched on again.

Setting or Changing the Delay Start Timer

Using the delay start timer you can delay.

Setting the delay start timer:

1. Press the ON/OFF button.
2. Keep pressing the DELAY TIMER button until the number of hours of delay is flashing on the multi-display.
3. Press the button for the desired wash programme. The multi-display now displays the number of hours without flashing. The number of hours is saved.
4. The wash programme starts automatically at the end of the delay set.

Changing the delay start:

As long as the wash programme has not started, you can still change the delay start set by pressing the DELAY TIMER button .

Load Sensing – Sensor Logic

If a wash programme is started even though there are only a few dishes in the upper and/or lower rack, an intelligent electronic system adjusts the amount of water and the duration of the wash programme to the number of dishes. By this means it is possible to wash only a few dishes quickly and economically. At half load (6 place settings), up to 2 litres of water and 0.2 kWh of electricity are saved.

Switching Off the Dishwasher

Switch the dishwasher off when the multi-display indicates "0" for the remaining programme time.

☞ 1. Press the ON/OFF button. The ON/OFF button indicator extinguishes.

⚠ Hot steam may escape from the appliance when opening the door immediately after the end of the programme.

2. Open the door carefully, as steam may escape.

Emptying the Dishwasher

ℹ
- The dishes should therefore be allowed to cool down before removing them from the appliance, as hot dishes can be sensitive to knocks.
- Leave the dishes in the dishwasher for approx. 15 minutes after the end of the programme so that they dry better and can cool down.
- First empty the lower rack, and then the upper rack. This will avoid any water that may be remaining in the upper rack, dripping onto the dishes in the lower rack and leaving water marks.

Care and Cleaning

⚠ Do not under any circumstances use furniture care products or aggressive cleaners.

- If necessary, clean the controls only with a soft cloth and pure warm water.
- The spray arms do not need cleaning.
- Occasionally check the internal containers, door seal, and water inlet for soiling, clean if necessary.

Cleaning the Filter

The filters should be checked and cleaned regularly. Blocked filters will give poor wash results.

1. Open the door, remove the lower rack.
2. The dishwasher filter system comprises a coarse/fine filter, microfilter and a flat filter. Unlock the filter system using the handle on the microfilter, and remove.
3. Turn the handle about 1/4 a turn anticlockwise and remove.
4. Take hold of the coarse/fine filter (1) by the handle with the hole and remove from the microfilter (2)
5. Clean all filters thoroughly under running water.
6. Remove the flat filter (3) from the base of the washing compartment and clean both faces thoroughly

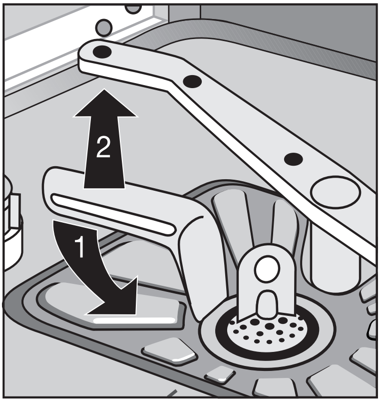

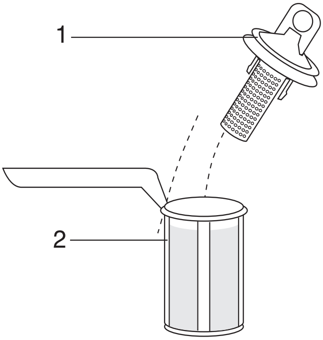

7. Put the flat filter back in the base of the washing compartment
8. Place the coarse/fine filter in the microfilter and press together.
9. Put the filter combination in place and lock by turning the handle clockwise to the stop. During this process ensure that the flat filter does not protrude above the base of the washing compartment.

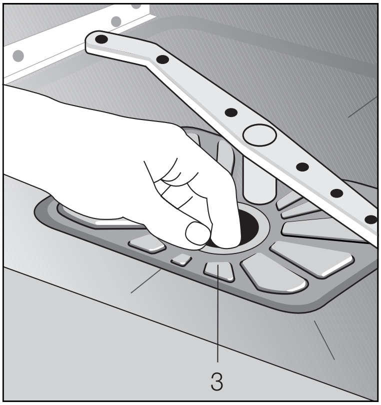

The dishwasher must not be used without filters under any circumstances.

What to do, if ...

Try to rectify minor faults on the dishwasher with the aid of the instructions given here. If you call an engineer to resolve a of fault listed here, or to repair a fault caused by incorrect use or installation, a charge will be made even if the appliance is in guarantee.

...Error messages

- If the programme indicator for the selected wash programme is flashing and fault code C1 or C2 is displayed on the multi-display, you can probably rectify the fault yourself.
  After rectifying this fault, press the button for the wash programme that has been started. The wash programme continues. If the fault code is displayed again, contact customer service.
- For all other faults, please contact customer service, stating the fault code.

Symptom	Possible Cause	Solution
Fault code C1 is displayed on the multi-display. The programme indicator for the selected wash programme is flashing: there is no water running into the dishwasher.	Tap is blocked or furred with lime-scale.	Clean tap.
	The filter (where present) in the threaded hose fitting is blocked.	Clean the filter in the threaded hose fitting.
	The water inlet hose is not correctly laid.	Check hose installation.
Fault code C2 is displayed on the multi-display. The programme indicator for the selected wash programme is flashing.	The sink outlet is blocked.	Clean the sink outlet.
	The water drain hose is not correctly laid.	Check hose installation.
Fault code C3 is displayed on the multi-display.	The leak prevention system has been triggered.	Close the tap and contact your local AEG Sevice Force Centre.

...there are problems with the operation of the dish-washer.

Symptom	Possible Cause	Solution
The programme does not start.	The door of the dishwasher is not closed properly.	Shut the door.
	Mains plug is not plugged in.	Insert mains plug.
	House fuse is defective.	Replace fuse.
	A start delay is selected.	If the dishes are to be washed immediately, set the start delay to 0 hours
Rust spots are visible in the washing compartment.	The washing compartment is made from rust-free stainless steel. Rust spots in the washing compartment are due to rust particles from external sources (rust particles from water pipes, pans, cutlery, etc.). Remove such spots with one of the stainless steel cleaners that are generally available on the market.	Only wash cutlery and dishes that are suitable for dishwasher use.
		Close the lid of the special salt container securely.
There is a whistling noise during washing.	The whistling is not a cause for concern.	Use a different brand of detergent.

...the wash results are not satisfactory.

The dishes are still dirty.
– The wrong wash programme was selected.
– The dishes were loaded is such a way that the wash waster did not reach all items. The racks for the dishes must not be overloaded.
– The filter in the base of the washing compartment is dirty or incorrectly positioned.
– Detergent was not used or too little was used.
– In the case of scale deposits on the dishes: The special salt container is empty or the water softener is incorrectly adjusted.
– The drain hose is incorrectly laid.

The dishes are wet and dull.
– Rinse aid was not used.
– The rinse aid container is empty.

There are streaks, milky spots or a bluish coating on glasses and dishes.
– Lower rinse aid dosing.

There are dried water drops on the glasses and dishes.
– Increase rinse aid dosing.
– The detergent may be the cause. Contact the detergent manufacturer's customer advisor.

Technical Data

Capacity:	12 place settings including serving dishes
Permitted Water Pressure:	1-10 bar (=10-100 N/cm^2 = 0.1-1.0 MPa)
Electrical Connection:	Information on the electrical connection is given on the rating plate on the inner edge of the dishwasher door on the right.
Dishwasher: Free-Standing Appliances	
Dimensions:	850 x 600 x 600 (H x W x D in mm)
Max. Weight:	54 Kg
Dishwashers that Can Be Integrated, Built-In Dishwashers	
Dimensions:	820 – 880 x 596 x 570 (H x W x D in mm)
Max. Weight:	50 Kg
Dishwashers that Can Be Fully Integrated	
Dimensions:	820 – 880 x 596 x 546 - 550 (H x W x D in mm)
Max. Weight:	50 Kg

CE This appliance conforms with the following EU Directives:
– 73/23/EWG dated 19. 02. 1973 – Low Voltage Directive
– 89/336/EWG dated 03. 05. 1989
(including Directive Amendment 92/31/EWG) – EMC Directive

Notes for Test Institutes

Testing in accordance with EN 60704 must be carried out with the appliance fully loaded and using the test programme (see Programme Table).

Tests in accordance with EN 50242 must be carried out when the salt dispenser and rinse aid container have been filled with salt and rinse aid respectively and using the test programme (see Programme Table).

	Full Load: 12 place settings incl. serving dishes	**Half Load:** 6 place settings incl. serving dishes, leaving alternate positions free
Detergent Dosing:	5g + 25g (Type B)	20g (Type B)
Rinse Aid Setting:	4 (Type III)	4 (Type III)

Sample loading arrangements:
Upper basket

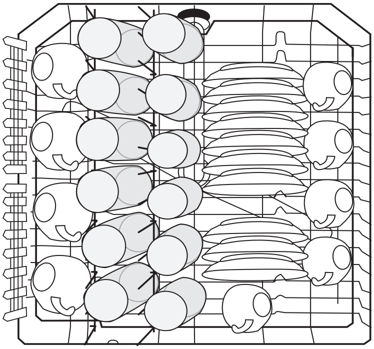

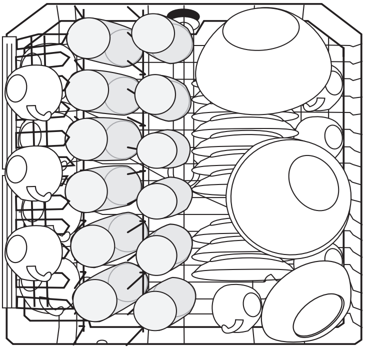

Lower basket with cutlery basket

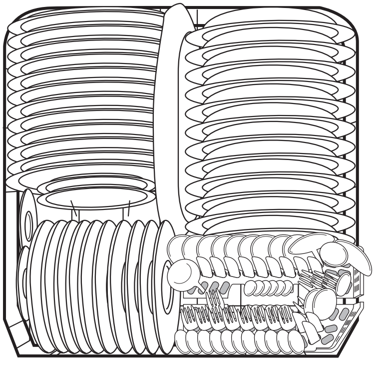

Cutlery basket

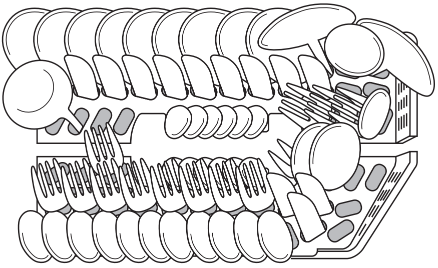

INSTALLATION AND CONNECTION INSTRUCTIONS

Installing the Dishwasher

- The dishwasher must be installed on a firm floor and adjusted such that it is stable and level.
- To compensate for unevenness in the floor and to match the height of the appliance to that of surrounding units extend the threaded feet by unscrewing:
  – use a screwdriver.

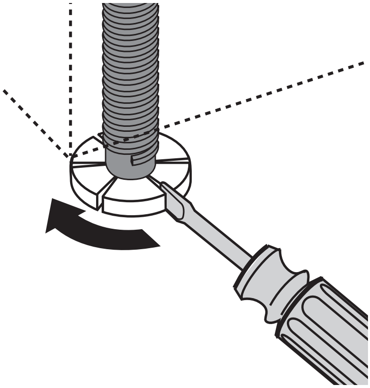

- For built-in, integrated and fully integrated dishwashers, the rear feet should be adjusted from the front of the appliance using a screwdriver.
- The drain hose, inlet hose and mains cable must be laid such that they are free to move in the rear of the plinth recess, so that they cannot be kinked or crushed.
- The dishwasher must also be screwed on tightly to the work surface or to the adjoining units. This is absolutely necessary so that its stability is guaranteed according to VDE regulations.

Dishwashers That Can Be Integrated

(see installation template supplied)

The door of the appliance can be fitted with a wooden/facing panel with the following dimensions:

Width:	591 – 594 mm	
Thickness:	16 – 24 mm	
Height: (variable)	dependent on	– Aperture height – Plinth height – The adjustment so that the unit matches the height of the adjoining units The exact height of the adjoining units must be measured at the place of installation.
Weight:	max. 8 kg	

Connecting the Dishwasher

Water Connection

The dishwasher is fitted with safety devices that prevent the wash water returning into the drinking water system and comply with the applicable plumbing regulations.

- The dishwasher can be connected to cold and hot water supplies up to max. 60 °C.
- The dishwasher **must not** be connected to open hot water appliances or instantaneous water heaters.

Permitted water pressure

Lowest permitted water pressure: 1 bar (=10 N/cm^2 =100 kPa)	Consult your installer if the water pressure is less than 1 bar.
Highest permitted water pressure: 10 bar (=100 N/cm^2 =1 MPa)	In the case of a water pressure greater than 10 bar, a pressure reduction valve must be used (available from your dealer).

Connect the inlet hose

The water inlet hose must not be kinked, crushed or entangled when it is being connected up.

☞ Connect the threaded hose fitting (ISO 228-1:2000) on the water inlet hose to a tap with an external thread (¾ inch). Tighten the threaded hose fitting **hand tight only**.

- In order that access to the tap in the kitchen is not limited by the use of the dishwasher, we recommend the installation of an additional tap, or fitting a two way adapter to the existing tap.
- If you need a longer water inlet hose than that supplied, VDE approved complete hose sets are to be used. These are available from your local Service Force Centre.

Water drain

Drain hose

The drain hose must not be kinked, crushed or entangled.

- Connecting the drain hose:
  - Maximum permitted height: 1 metre.
  - Minimum required height 30 cm above the lower edge of the machine.

Extension hoses

- Extension hoses are available from AEG Service Force. The internal diameter of the extension hoses must be 19 mm to ensure that the function of the appliance is not impeded.
- Hoses may be laid a maximum of 3 metres horizontally; the maximum permitted height for the connection for the drain hose is then 85 cm.

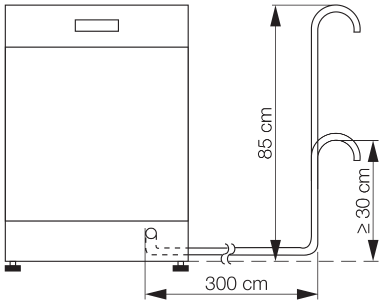

Sink outlet connection

- The outlet of the drain hose (ø 19 mm) fits all commonly available sink outlet spigot types. The outer diameter of the spigot connection must be at least 15 mm.
- The drain hose must be fixed to the sink outlet connection using the hose clamp supplied.

If the dishwasher is fitted at a high position

If the dishwasher is installed at a high level, and the drainhose connection is less than 30 cm from the bottom of the appliance, adapter kit ET 111099520 must be fitted. This is available from Customer Service.

Discharging into a standpipe

When discharging into a standpipe, the upright standpipe should have a minimum, length of 30 cm (12") from the bottom of the elbow to the top of the pipe (see diagram). Make sure that it is designed in such a way that the end of the drain hose cannot be covered with water.

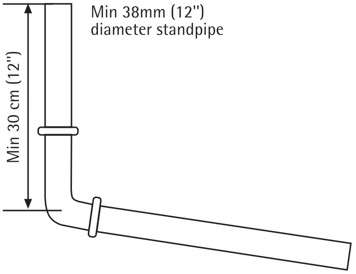

Leak Prevention System

For protection from damage due to water leaks, the dishwasher is equipped with a leak prevention system, the AQUA CONTROL SYSTEM.

In the event of a fault, the safety valve immediately interrupts the supply of water to the appliance and the drain pump switches on. By this means water can neither escape nor overflow. The remaining water in the appliance is automatically pumped out.

The AQUA CONTROL SYSTEM also works when the appliance is switched off – the appliance must however **not** be disconnected from the mains.

Electrical Connection

Any electrical work required to install this appliance should be carried out by a qualified electrician or competent person.

WARNING - This appliance must be earthed.
The manufacturer declines any responsibility should these safety measures not be observed.

Before switching on make sure the electricity supply voltage is the same as that indicated on the appliance rating plate.

To isolate the dishwasher from the mains, remove the mains plug.
Important: The plug must still be accessible after the appliance has been installed.

Changing a fuse

The appliance is supplied with a 13amp plug fitted. In the event of having to change the fuse in the plug supplied, a 13amp ASTA approved (BS 1363A) fuse must be used.

Should the plug need to be replaced for any reason, proceed as described below.

The wires on the mains lead are coloured in accordance with the following code.

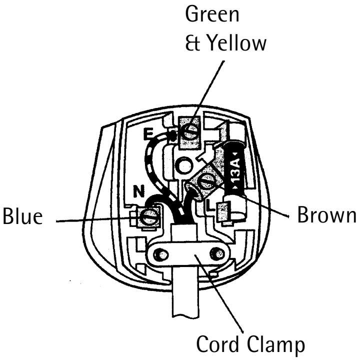

Green and Yellow	**: Earth**
Blue	**: Neutral**
Brown	**: Live**

- The wire coloured green and yellow must be connected to the terminal marked with the letter "E" or by the earth symbol ⏚ or coloured green and yellow.
- The wire coloured blue must be connected to the terminal "N" or coloured black.
- The wire coloured brown must be connected to the terminal marked "L" or coloured red.
- Upon completion there must be no cut, or stray strands of wire present and the cord clamp must be secure over the outer sheath.

WARNING! A cut off plug inserted into a 13 amp socket is a serious safety (shock) hazard. Ensure that, if it is necessary to cut off the plug, it is disposed of safely and not retained.

Connections

The water inlet and drain hoses, as well as the mains cable must be connected beside the dishwasher as there is insufficient space behind the appliance.

The plumbing and electrical installation example given below can only be regarded as a recommendation.

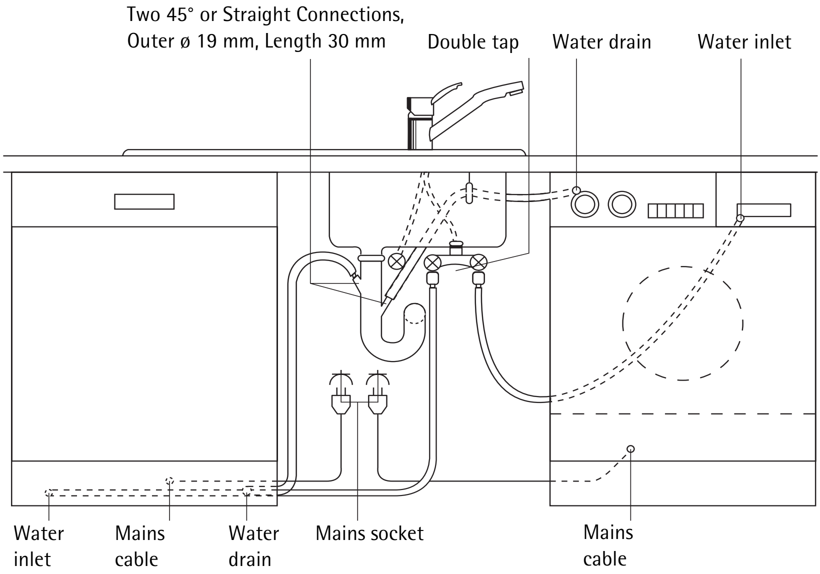

GUARANTEE CONDITIONS

Guarantee Conditions

AEG offer the following guarantee to the first purchaser of this appliance.

1. The guarantee is valid for 12 months commencing when the appliance is handed over to the first retail purchaser, which must be verified by purchase invoice or similar documentation.

   The guarantee does not cover commercial use.

2. The guarantee covers all parts or components which fail due to faulty workmanship or faulty materials. The guarantee does not cover appliances where defects or poor performance are due to misuse, accidental damage, neglect, faulty installation, unauthorised modification or attempted repair, commercial use or failure to observe requirements and recommendations set out in the instruction book.

   This guarantee does not cover such parts as light bulbs, removable glassware or plastic, dust bags or filters.

3. Should guarantee repairs be necessary the purchaser must inform the nearest customer service office (manufacturer´s service or authorised agent). AEG reserves the right to stipulate the place of the repair (i. e. the customer´s home, place of installation or AEG workshop).
4. The guarantee or free replacement includes both labour and materials.
5. Repairs carried out under guarantee do not extend the guarantee period for the appliance. Parts removed during guarantee repairs become the property of AEG.
6. The purchaser´s statutory rights are not affected by this guarantee.

European Guarantee

If you should move to another country within Europe then your guarantee moves with you to your new home subject to the following qualifications:

- The guarantee starts from the date you first purchased your product.
- The guarantee is for the same period and to the same extent for labour and parts as exist in the new country of use for this brand or range of products.
- This guarantee relates to you and connot be transferred to another user.
- Your new home is within the European Community (EC) or European Free Trade Area.
- The product is installed and used in accordance with our instructions and is only used domestically, i. e. a normal household.
- The product is installed taking into account regulations in your new country.

Before you move please contact your nearest Customer Care Centre, listed below, to give them details of your new home. They will then ensure that the local Service Organisation is aware of your move and able to look after you and your appliances.

France	Senlis	+33 (0) 44 62 29 29
Germany	Nürnberg	+49 (0) 911 323 2600
Italy	Pordenone	+39 (0) 1678 47053
Sweden	Stockholm	+46 (0) 8 738 7910
UK	Slough	+44 (0) 1753 219899

SERVICE & SPARE PARTS

If you wish to purchase spare parts or require an engineer, contact your local AEG Service Force Centre by telephoning:

08705 929 929

Your telephone call will be automatically routed to the Service Centre covering your post code area.

When you contact the Service Centre they will need the following information:

1. Your name & address, including post code.
2. Your telephone number
3. Clear and concise details of the fault.
4. The model, serial and production number. This information can be found on the rating plate. The rating plate is on the inner edge of the door on the right.

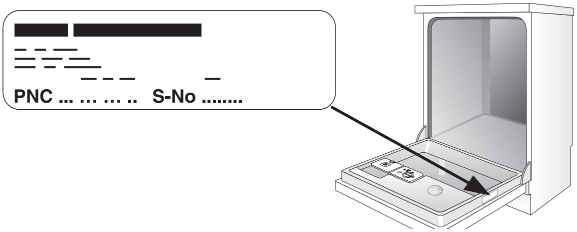

5. Date of purchase. Please note that it will be necessary to provide proof of purchase for any in guarantee service call.

In-guarantee customers should ensure that the chapter headed “What to do if ...“ has been read, as the engineer will make a charge if the fault is not a mechanical or electrical breakdown.

Customer Care

For general enquiries concerning your AEG appliance or for further information on AEG products please contact our Customer Care Department by letter or telephone at the address below or visit our website at www.aeghome.co.uk.

Customer Care Department
AEG Domestic Appliances
55-77 High Street
Slough
Berkshire, SL1 1DZ

Tel. 08705 350350 (*)

(*) Calls may be recorded for training purposes

The Electrolux Group is the world's largest producer of powered appliances for kitchen, cleaning and outdoor use. More than 55 million Electrolux Group products (such as refrigerators, cookers, vacuum cleaners, chain saws and lawn mowers) are sold each year to a value of approx. 14 billion USD in more than 150 countries around the world.

***From the Electrolux Group.** The world's No.1 choice.*

AEG Hausgeräte GmbH
Postfach 1036
D-90327 Nürnberg

http://www.aeg.hausgeraete.de

© Copyright by AEG

822 946 104 - 00 - 1101

Subject to change without notice